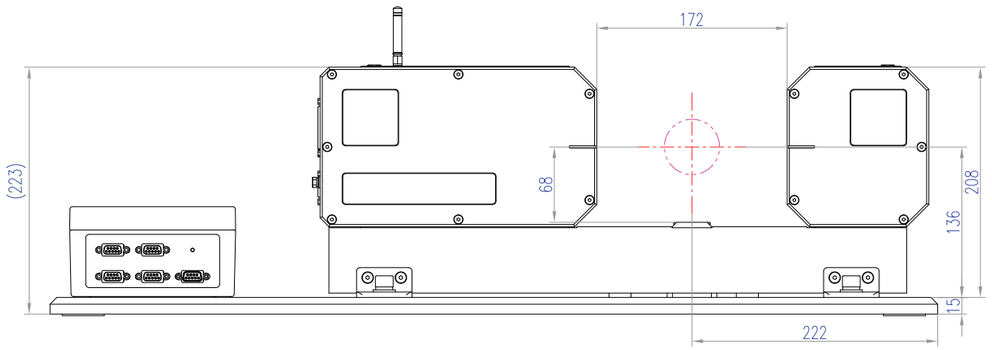

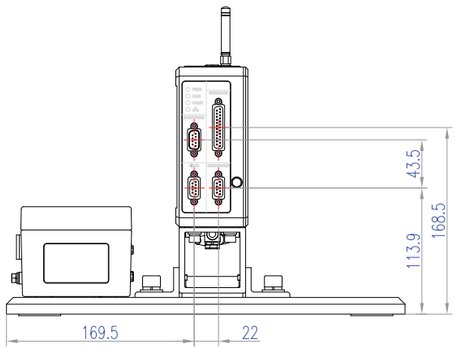

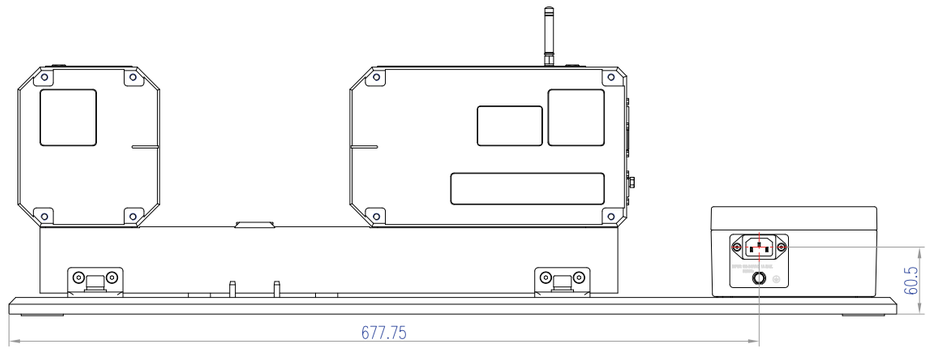

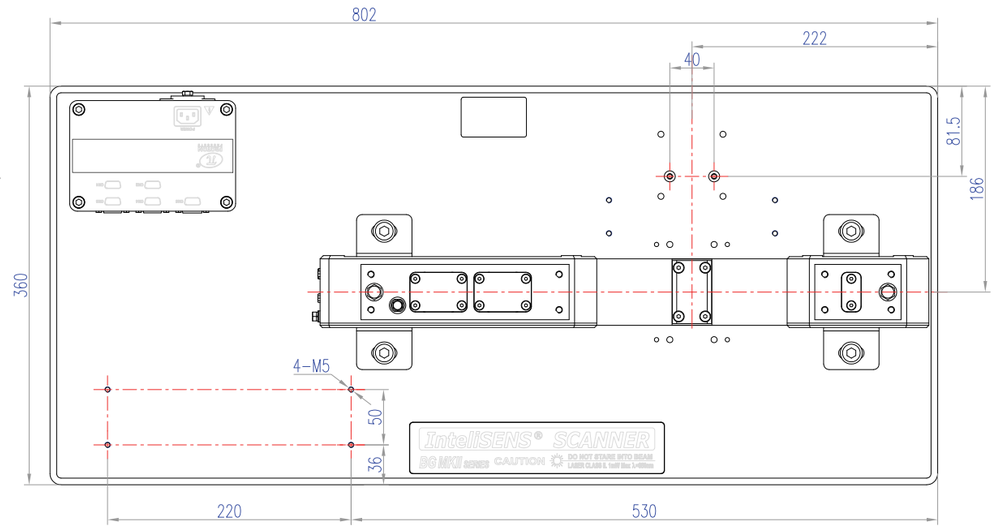

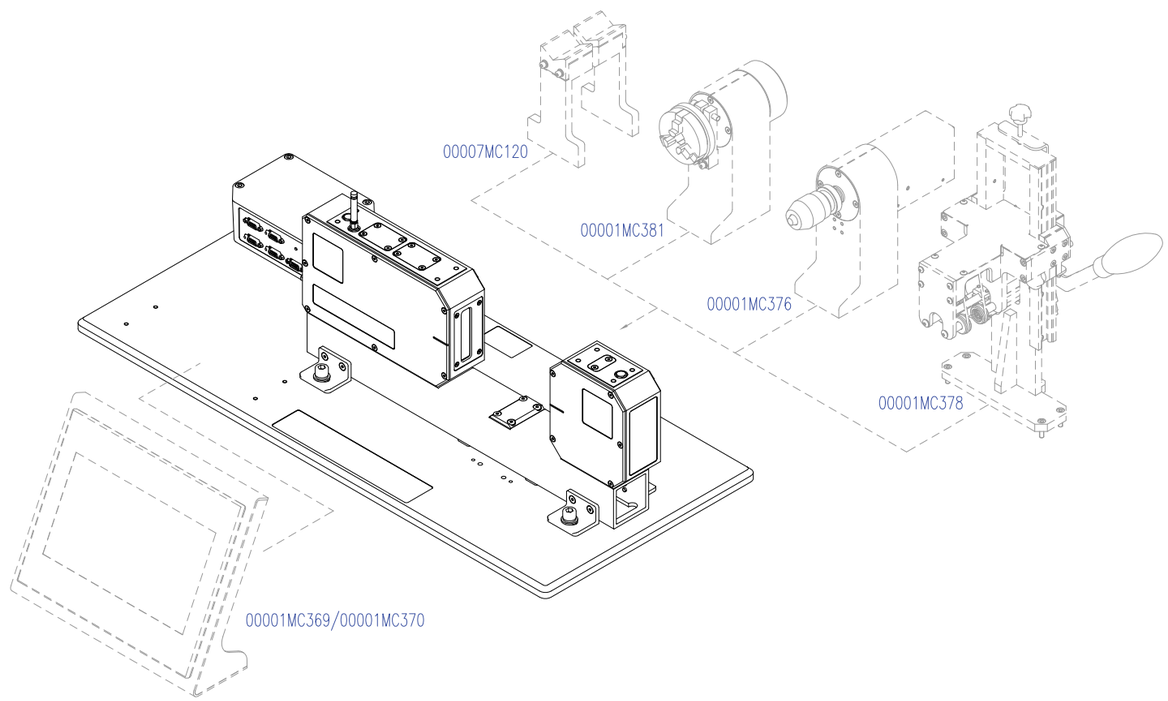

UNCURBED TOLERANCES ANGULAR X. ±0.20mm ±15' .0 ±0.10mm .00 ±0.05mm .000 ±0.02mm UNCURBED SURFACE ROUGHNESS 32		UNLESS OTHERWISE SPECIFIED ALL DIMENSIONS ARE IN MM BREAK ALL BURRS AND SHARP EDGES FIRST ANGLE PROJECTION	TITLE BG1060 MKII			DRAWING No. 00054MC019 MATERIAL ASSEMBLY	
			QUANTITY	WEIGHT	SCALE	ASSEMBLY No.	
DRAWN		PROGRAM	–	–	1:2.5	00054MC019	
CHECKN		STANDARD	PROTON Products (Chengdu) LTD			ISSUE 01	REC.DOC
AUDIT		APPROVED				SHEET 1 OF 1	A2